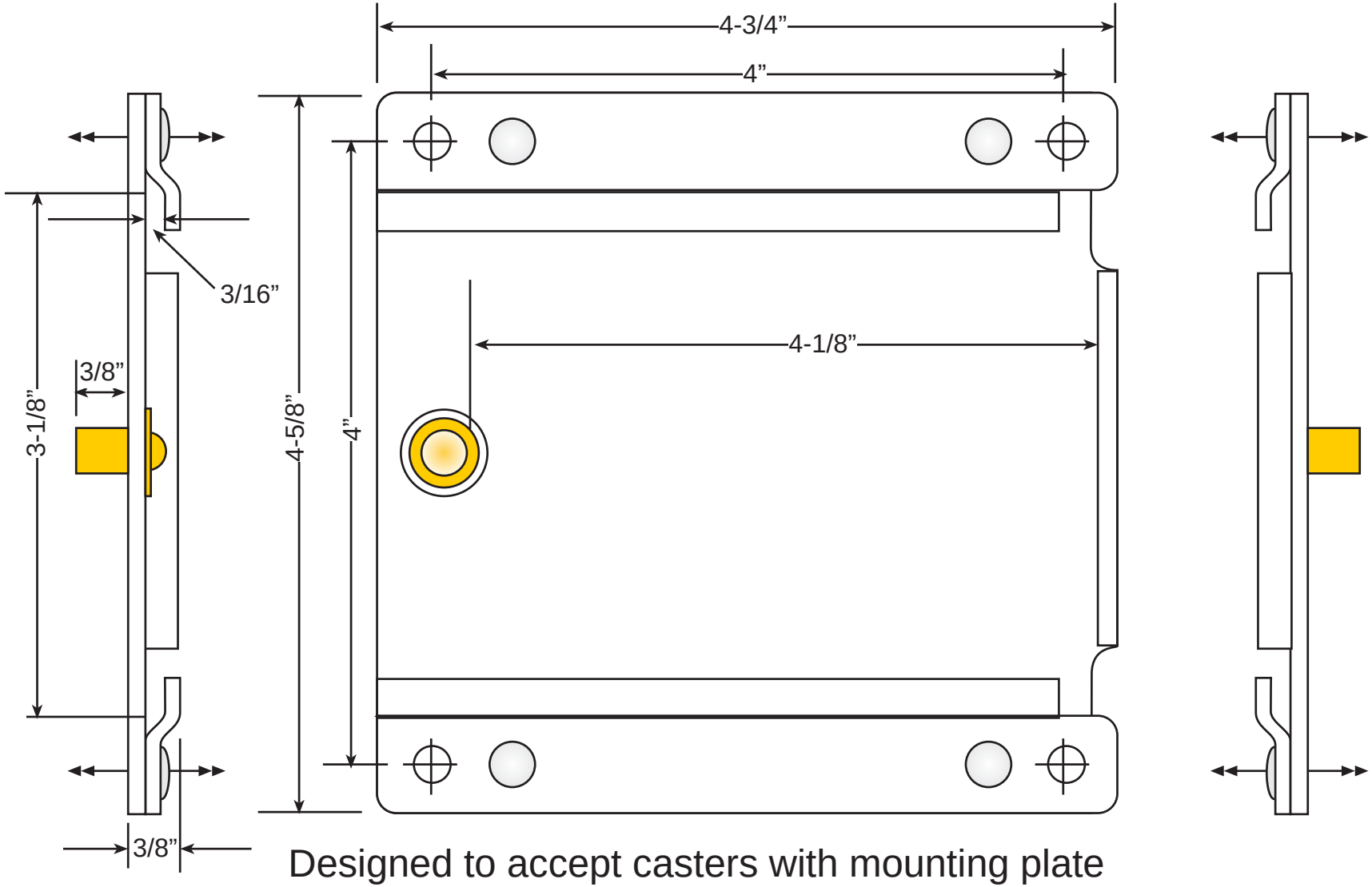

Designed to accept casters with mounting plate meauring 4-1/8”x3-1/8”x1/8” thick